Satchwell

IAC 600

WIRING AND COMMISSIONING INFORMATION FOR

UNIVERSAL MULTI-LOOP INTELLIGENT ADVANCED CONTROLLER 600

Spec No: IAC 600 Base Unit – 565-3-201
Touch-screen Unit – 565-3-402
Remote Touch-screen Adaptor Kit – 565-2-601

GENERAL CONTROLLER DETAILS

The IAC has been designed to be a very flexible controller and can be configured for use in a large number of different applications.

The IAC comes with a number of preset applications that can be selected by the user. These applications may then be further customised by the user if required. Once an IAC 600 has been customised it is possible to save this new configuration in Satchnet and use it on any other IAC 600s as required.

The IAC 600 Touch-screen allows direct viewing/modification of selected parameters on any IAC connected to its sub LAN. The IAC 600s configuration and setting of parameters is carried out from a computer running the Satchnet Bubbleland software. See your Satchnet User Guide for details of using Bubbleland. In the event of a power failure, the IAC clock will stop until it is reset by the computer, a Touch-screen or re-synchronized by the digital input.

The computer and Touch-screen broadcast the time on a regular basis. On restoration of power, the IAC will run from the last known time before power failure.

The IAC is made up from a number of discrete modules as shown below:-

MODULE LIST

All the modules are described in full from page 3. This listing includes the module parameters, their default values and ranges.

The modules are linked together either by choosing a preset application or by customising applications from a computer running the Satchnet Bubbleland software. The software employs a graphical interface that allows you to use a mouse to point at the various modules and link them together. Any links that are invalid are rejected by the software. The various settable parameters within each module have standard default values that may easily be modified from the module menus. This method of configuring the controller guides the user through the configuration process in a logical manner.

By using the Bubbleland software the Touch-screen can be configured to display (and allow modification to) any IAC parameters. The Touch-screen operates on a user defined menu structure and a standard graphics library is available with symbols such as switches, fans, pumps, boilers, lights, humidifiers, doors, thermometers etc. These graphic symbols are used to show the state of the inputs and outputs or any other parameters.

SIEBE

A Siebe Group Product

INSTALLATION

LOCATION

Select a position that is reasonably clean and free from damp and condensation. A minimum of 50mm clearance is required above and below the controller to allow for wiring. Ambient temperature limits should be within 0 to 50°C

For mounting instructions see MLI 2.10/2.951, as supplied with the controller.

MLI 2.10P is supplied with the Touch-screen panel mounting kit.

DO NOT SWITCH ON THE POWER SUPPLY UNTIL COMMISSIONING PROCEDURES HAVE BEEN CARRIED OUT. To avoid inadvertent damage, it is recommended that the 24 Volt supply fuse is removed from the control panel and refitted after the site wiring and commissioning have been completed.

COMMISSIONING

See also DS 5.00A for full details of commissioning the Satchnet system.

1. Ensure the IAC controller has no mains Voltages connected to any of its terminals before any commissioning checks are carried out.
2. Refer to the system diagram and check that all wiring is correctly connected to the terminal blocks.
3. Ensure IAC terminal 2 is earthed.
4. Check that the terminal sockets are correctly aligned with the terminal plugs on the IAC.
5. If any Input or Output wiring is greater than 100 metres long ensure it is screened. The screen should be earthed only at the IAC controller using one of the earth terminals supplied (DO NOT USE AN ISOLATED GROUND).
6. Ensure that the serial link connections are screened. LAN A and LAN B screens must be connected to a verified good earth ONLY at the computer/MIU. LAN A and LAN B screens should be connected to the IAC isolated ground terminals of each IAC on the LAN (DO NOT USE THE IAC EARTH TERMINALS). See figs 12 to 15 for details.
7. If a Touch-screen is to be used ensure it is plugged in before applying power to the IAC.
8. GENERAL:- Do not connect/disconnect any input, output, LAN or Touch-screen with the power connected as this could damage the LAN.
9. Disconnect all outputs to the plant. Replace the 24Vac supply fuse.
10. Set the correct preset application for the system (see fig. 5, page 19 for configuration details. If the configuration is to be loaded from computer then select preset 0 (software preset) on the bit switch.
11. If a Touch-screen is fitted, check that the address is set correctly, see the Touch-screen User Guide for details.
12. Set the correct address for the IAC (see fig. 6, page 19 for setting details).
13. Remove the 24Vac fuse and re-connect all the outputs to the plant. Replace the 24Vac supply fuse.
14. Configure the IAC from a computer running ver 6.11 (or later) Satchnet Networking Software. See configuration details starting on page 3.

GENERAL NOTES

1. The IAC uses two types of signal internally. They are as follows:-

   Analogue Values from –10,000 to +10,000 these represent temperature (°C, °F), Voltages, Ohms, Lux and control outputs.
   Digital signals, these signals are either On or Off.
2. Analogue inputs or outputs cannot be directly connected to Digital inputs or outputs. To convert an analogue value to a digital signal use a threshold module.
3. When handling Voltage or controller output signals you should note that values are in the range of 0 to 100 where 0 = Off or 0 Volts and 100 = full On or 10 Volts.
4. °C, °F, Ohms and Lux are all displayed as actual values e.g. 20°C = 20, 68°F = 68, 2000 Ohms = 2000 etc.
5. When using a controller module for single stage only the unused stage should be set as follows:-
   Proportional Band = 10,000
   Integral Action Time = 0
   Derivative Action Time = 0
   Ramp Time = 0
6. Maximum of 100 links between modules per IAC base unit.

MODULES AND FUNCTIONS

Bubbleland Symbol	Module	Range	Default
	INPUT/OUTPUT MODULES		
	**DIGITAL INPUT MODULE** x 8		
	Current State of Input (review only) This parameter displays the current input state.	On or Off	–
	Latch Input This parameter allows the digital input to be latched so that a momentary input will switch the module on and a second input will switch it off.	Yes or No	No
	Toggle This parameter switches a latched input into the opposite state.	On or Off	–
	**TEMPERATURE (RESISTIVE) INPUT MODULES** x 6		
	Current Measured Value (review only) This parameter displays the current input value in the selected units.	–40 to 150°C –40 to 302°F 250 to 9750 Ω 0 to 10,000 Lux	–
	Units Selection This parameter selects the units that can be used for the input.	°C, °F, Ohms or Lux	°C
	**ANALOGUE INPUT MODULES (VOLTAGE)** x 6		
	Current Measured Value as a percentage of 10 Volts (review only)	0 to 100%	–
	**DIGITAL (TRIAC) OUTPUT MODULES** x 8		
	Output State (review only)	On or Off	–
	Override State	None, On or Off	None
	**ANALOGUE OUTPUT MODULES** x 4		
	Current Output Value as a percentage of 10 Volts (review only)	0 to 100%	–
	Override Value e.g. 0 = 0V, 50 = 5V, 100 = 10V	0 to 100%	0%
	Enable Override	On or Off	Off
	MATHS MODULES		
	**SUBTRACTION, MULTIPLICATION, DIVISION AND ADDITION MODULES** x 8, total number of any combination These modules allow mathematical operations to be carried out on values within the controller. Each module can accept two value inputs and the module will produce a value output. The addition module is shown, left.		
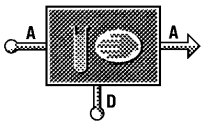	**SAMPLE AND HOLD MODULE** x 6 This module is used to sample an Analogue value when the Digital input on the module is momentarily switched on. The sample module will then output the current sample value. The module will keep the value until the next time the Digital input is set to on, at which point another sample is taken.		
	NOTE:- If the Digital input is left set at on, the output of the module will follow the module input.		
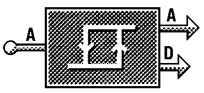	**HYSTERESIS MODULE** x 8 This module is used to pass on a change in value only when that change is greater than the value set in the module. When a change is passed through the digital output is switched on briefly. This can be used to drive the Logging module for event based logging.		
	Hysteresis	0 to 10,000	1
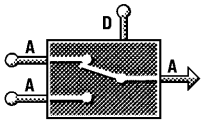	**ANALOGUE SWITCH MODULE** x 6 This module switches an analogue output between two analogue inputs. The switching is triggered by a digital input state. Possible applications are sensor selection, override of fan speeds/actuator position etc.		

MODULES AND FUNCTIONS

Bubbleland Symbol	Module	Range	Default

MATHS MODULES (Cont.)

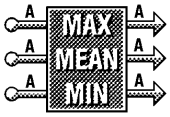

ANALOGUE AVERAGING MODULE x 6
This module requires no setting and is used to average up to 3 inputs. The module supplies a maximum, minimum and average output value.

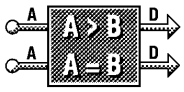

COMPARATOR MODULE x 8
The Comparator module is used to compare two analogue inputs and give two Digital outputs if certain conditions are true. If the inputs are referred to as A and B then the required conditions are:-
A ≥ B then output 1 is on
A = B '+ or –' the set tolerance then output 2 is on

Tolerance A tolerance can be set for the A = B output such that the condition will trigger when A = B '+ or –' the tolerance	0 to 10,000	1

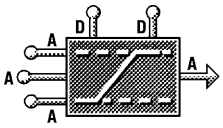

LIMITER MODULE x 8
The Limiter module is used to limit the range of an Analogue signal. The upper and lower limits can be set either from within the module or by feeding an analogue signal into the two analogue inputs. The value of these inputs sets the corresponding upper and lower limits. Digital inputs on the module override the module output to the upper or lower set limit respectively.

Minimum Value	–10,000 to 10,000	0
Maximum Value	–10,000 to 10,000	100

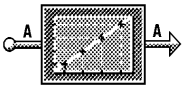

LOOK-UP TABLE MODULE x 6
The Look-up Table module is used to scale any analogue signal to a set of units, for instance pressure. The input and corresponding output value can be entered.

Input Value 1 and Output Value 1
There are eleven of these pairs to allow for non linear sensor characteristics. If all eleven pairs are not required unused pairs are set to - - -.

NOTE:- The 'IN' value must increase in size from input value 1 upto input value 11 for the look-up table to function correctly.

–10,000 to 10,000

IN	OUT
0	0
10	2
20	3
30	4
40	6
50	10
60	16
70	25
80	40
90	63
100	100

SCALING MODULE x 8
The Scaling module is used to re-scale an analogue signal based on minimum and maximum input and output values. From these values the IAC scales all the points in between linearly.

For example for values of 0 in 0 out and 50 in 100 out a 0 to 5 Volt input is expanded to a 0 to 10 Volt output.

Signals can be reversed by using this module by setting, for example 0, 100 and 100, 0 this would reverse a 0 to 10Vdc input signal.

NOTE:- The Input Minimum Value must be less than the Input Maximum Value for the Scaling Module to function correctly.

Input Minimum Value	–10,000 to 10,000	0
Output Minimum Value	–10,000 to 10,000	0
Input Maximum Value	–10,000 to 10,000	100
Output Maximum Value	–10,000 to 10,000	100

THRESHOLD MODULE x 8
The Threshold module is used to provide a switched output from an analogue input. If both the on and off values are set the same the module will act as a simple switch. If the off value is set below the on value then the switch will have a hysteresis on it. The Off threshold must be less than or equal to the On threshold.

On Threshold	–10,000 to 10,000	0
Off Threshold	–10,000 to 10,000	0

RATE LIMITING MODULE x 6
This module allows any varying analogue signal to be slowed down or smoothed. The time (in seconds) and a value are set. The output value will then follow the input as long as it changes at/or slower than the set value per set time period. If it changes faster than the values set then the output will change only at the rate set. For example, the module may be set at 5°C per 1 second, if the input changes by 10°C in 1 second and stabilizes then the output will take two seconds to equal the input.

MODULES AND FUNCTIONS

Bubbleland Symbol	Module	Range	Default

LOGIC MODULES

Deviation	1 to 10,000	0
Time	1 to 10,000 Seconds	0 Secs

LOGIC MODULES x 20, total number of any combination of 'NOT', 'AND' and 'XOR' Gates

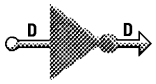

'NOT' Modules
This module requires no setting and is used to reverse the digital inputs i.e. On/Off inputs. This can be any On or Off signal within the IAC. For example, if a digital signal is Off when it goes into the inverter it will be transmitted out as On and vice versa. In conjunction with the "AND" gates, and 'XOR' Gates these inverters can perform interlock functions.

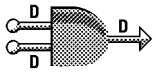

'AND' Gate Modules
This module is used to take 2 digital inputs and "AND" them together to give a new digital output. The gate must have both digital signals as On before it will give an On output. In conjunction with the 'NOT' gates and 'XOR' gates these gates can perform interlock functions.

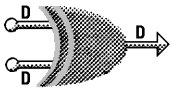

XOR (EXCLUSIVE OR) Gates
XOR GATE, one input only must be On to give an On out. E.g. Off, On = On out

NOTE:- All digital inputs work as a normal OR Gate within normal modules when multiple digital signals are applied to a single digital input. That is any number of the inputs are On then the output is On. E.g. Off, On, Off, On, On in = On out

By placing a NOT Gate after an AND Gate the output is inverted thus providing a NAND gate equivalent. A 'NOR' gate is created by connecting two or more inputs into a 'NOT' gate. By placing a NOT Gate after an XOR Gate an EQUIV Gate is created (if both inputs are the same then the output is on if not the output is OFF).

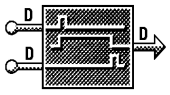

LATCH MODULES x 8
The Latch module is used to take a momentary Digital input and give a latched output. The output will now stay on until it is cleared by the reset input being set momentarily to on.

This module is used to monitor a pulse type signal and create a longer signal.

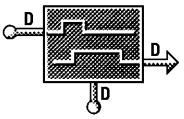

DELAY MODULES x 8
The Delay module enables an incoming digital signal to be manipulated. By delaying the on state you can ensure that the incoming signal must be on for a minimum amount of time before it is recognised. By delaying the off state of the incoming signal a minimum on time can be guaranteed. The output from the module can then be used as an output to another module.

Period	0 to 10,000 Seconds	0 Secs
Hold On/Off	On or Off	On
Rising Edge/Falling Edge	Rising or Falling	Falling
Re-trigger	Yes or No	No

Example 1: Start Up Delay:
Period = T
Delay Type = Hold Off
Edge = Rising
Re-trigger = No

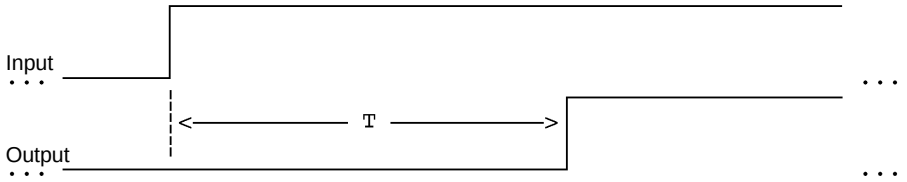

Example 2: Minimum Run Time:
Period = T
Delay Type = Hold On
Edge = Rising
Re-trigger = No

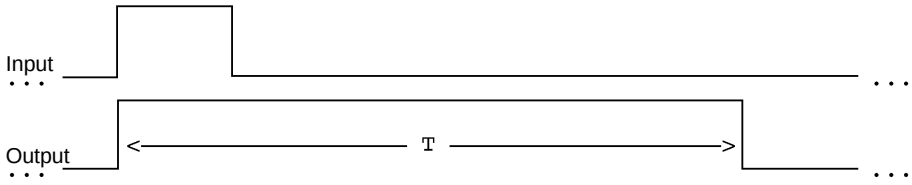

Example 3: Minimum Off Time:
Period = T
Delay Type = Hold Off
Edge = Falling
Re-trigger = No

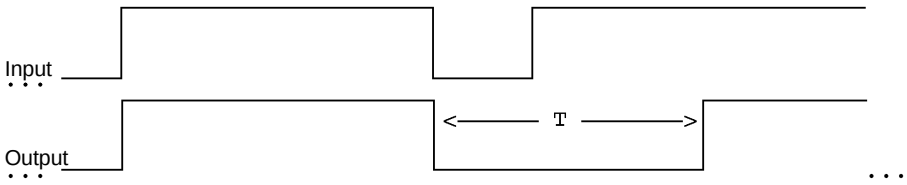

MODULES AND FUNCTIONS

Bubbleland Symbol	Module	Range	Default
	LOGIC MODULES (Cont.)		
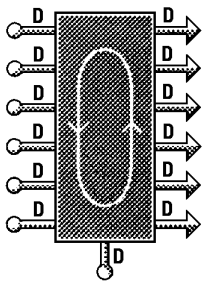	**ROTATION MODULE** x 3 The Rotation module is used to rotate upto six digital inputs in sequence. Rotation is triggered by a digital pulse on the rotate input. Only those inputs connected are rotated. This is typically used to rotate modular plant such as boilers, chillers, pumps etc to even out the wear on the individual items of plant.		
	Current Lead (review only)	1 to 6	–
	Rotate Allows the module to be manually rotated. Each selection rotates to the next item of plant.	On or Off	Off
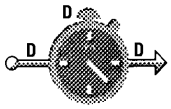	**STOPWATCH MODULE** x 8 The Stopwatch module has a digital input that when set to on will run the stopwatch. The stopwatch will stop when the input is set to off. A second digital input on the module is used to reset the module to zero. A typical use for this module is plant hours run, boiler/chiller rotation, switching the logging module for timed logs etc.		
	Current Count This parameter is usually used to review the current count but it also allows the user to set an initial count value if required.	0 to 10,000	0
	Rollover Time The digital output will produce a pulse at the set rollover time and the stopwatch will reset to zero and start counting again.	0 to 10,000	3600
	Selected Count Units	Seconds, Minutes, Hours or Days	Secs
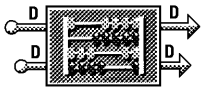	**COUNTER MODULE** x 8 The Counter module is used to count pulsed digital inputs on either the rising edge of the momentary digital input or on both the rising and falling edges. The secondary output will be pulsed each time a count is made. This includes the falling edge if that has been set in the counter. The secondary digital input is used to zero the counter at a time other than when the rollover count is reached.		
	Current Count This parameter is usually used to review the current count but it also allows the user to set an initial count value if required.	0 to 10,000	0
	Rollover Count At a preset rollover count the module will give a momentary output from the primary output, reset to zero and start counting again.	0 to 10,000	1000
	Count Rising and Falling Edges Sets the module to count both the rising and falling edges of the pulsed input.	Yes or No	No
	CONTROL MODULES		
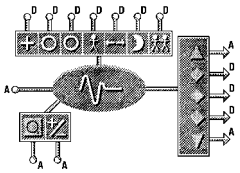	**CONTROLLER MODULE, 2 STAGE** x 6 **Current Set Value** (review only) This parameter displays the calculated set value. This may differ from the main set value if reset is used.	–10,000 to 10,000	–
	Integral Action Dumping On The optimiser set point must be equal to the controller set value minus the appropriate deadzone.		
	Integral Action Dumping Off The optimiser set point must equal the controller set value.		
	Current Input Value (review only) This parameter displays the current value of the main control sensor.	–10,000 to 10,000	–
	Schedule Mode (review only) This parameter shows the timeschedule mode the control module is currently operating in.	Occupied 1, Occupied 2, Relaxed or Night	–
	Override This parameter is used to override the controller.	None, Occupied 1, Relaxed, Occupied 2 or Night	None
	Stage 1 Level This parameter displays the Stage 1 output position as a percentage, where 0 = Full Off and 100 = Full On. In Temperature Control schemes Stage 1 is used for heating.	0 to 100%	–
	Stage 2 Level This parameter displays the Stage 2 output position as a percentage, where 0 = Full Off and 100 = Full On. In Temperature Control schemes Stage 2 is used for cooling.	0 to 100%	–
	Set Value This parameter is used to set the desired controller set value.	–10,000 to 10,000	19
	Set Value Minimum This value sets the lowest set value the controller is allowed to use.	–10,000 to 10,000	–10,000
	Set Value Maximum The value sets the highest set value the controller is allowed to use.	–10,000 to 10,000	10,000

MODULES AND FUNCTIONS

Bubbleland Symbol	Module	Range	Default
CONTROL MODULES (Cont.)			
	RPW Setting (review only) This parameter displays the remote set value from the RPW input to the controller.	–10,000 to 10,000	–
	Reset Setting (review only) This parameter displays the influence that the reset input is having on the set value.	–10,000 to +10,000/10 Volts	–
	Reset Ratio This setting is used to determine the influence that an analogue input connected to the reset input of the controller has over the main set value. By setting the value as a positive number the set value will be increased as the analogue input is increased. The opposite is true if it is set to a negative value.	–10,000 to +10,000/10 Volts	10
	Stage 1 Deadzone Occupied The deadzone is the difference between the set value and the point at which the stage starts to control. This parameter is used whilst the controller is in occupied mode.	0 to 10,000	1
	Stage 2 Deadzone Occupied The deadzone is the difference between the set value and the point at which the stage starts to control. This parameter is used whilst the controller is in occupied mode.	0 to 10,000	1
	Stage 1 Deadzone Relaxed As for the occupied deadzone but only used whilst the controller is in relaxed mode.	0 to 10,000	3
	Stage 2 Deadzone Relaxed As for the occupied deadzone but only used whilst the controller is in relaxed mode.	0 to 10,000	3
	Stage 1 Deadzone Night As for the occupied deadzone but only used whilst the controller is in night mode.	0 to 10,000	6
	Stage 2 Deadzone Night As for the occupied deadzone but only used whilst the controller is in night mode.	0 to 10,000	6
	Upper Deadzone (review only) This parameter displays the upper deadzone value that the IAC is currently using.	–10,000 to 10,000	–
	Lower Deadzone (review only) This parameter displays the lower deadzone value that the IAC is currently using.	–10,000 to 10,000	–
	Stage 1 Proportional Band This setting is the range over which the Stage 1 output moves proportionally across its full stroke.	0 to 10,000	10
	Stage 1 Integral Action Time (0 = Off) This parameter is the set time interval necessary for integral action time to increase the Stage 1 output by the current proportional level. Set to 0 for purely proportional control.	0 to 10,000 Seconds	300 Secs
	Stage 1 Derivative Action Time (0 = Off) This is usually left at zero. It is used where a faster control action is required and reducing the Proportional Band and/or Integral time causes hunting. As a guide, the derivative time must be set at less than a tenth of the Integral Time as a start point.	0 to 10,000 Seconds	0 Secs
	Stage 1 Ramp Time This determines the time in seconds for the output stage to change from fully closed to fully open (given a continuous demand).	0 to 10,000 Seconds	60 Secs
	Stage 2 Proportional Band This setting is the range over which the Stage 2 output moves proportionally across its full stroke.	0 to 10,000	10
	Stage 2 Integral Action Time (0 = Off) This parameter is the time interval necessary for integral action time to increase the Stage 2 output by the current proportional band. Set to 0 for purely proportional control.	0 to 10,000 Seconds	300 Secs
	Stage 2 Derivative Action Time (0 = Off) See Stage 1 Derivative Action Time	0 to 10,000 Seconds	0 Secs
	Stage 2 Ramp Time This determines the time in seconds for the output stage to change from fully closed to fully open (given a continuous demand)	1 to 10,000 Seconds	60 Secs
	Sample Time (0 = as fast as possible) This is the interval between successive readings of the measured values at the connected sensors. A short interval of say 10 seconds permits rapid response but only a small amount of corrective action. It is suited to systems having short time constants. A longer interval such as 20 seconds is slower to react but permits a larger amount of corrective action. For this reason it is suited to systems having medium length time constants. If control action tends to be too slow reduce the setting and if it tends to hunt increase it. This fine tuning should be done in small steps of around 10 to 20%.	0 to 10,000 Seconds	10 Secs

MODULES AND FUNCTIONS

Bubbleland Symbol	Module	Range	Default
	CONTROL MODULES (Cont.)		
	Integral Action Method This setting determines the method of control by the IAC. Mode "A" controls such that the IAC takes into account the deadzone and uses the end of the appropriate stage deadzone as the set value point. Mode "B" controls using the actual set value.	Mode A or B	A
	Integral Action Dumping The IAC allows the use of integral action in two different modes. If the parameter is set to Off then the IAC holds the current control level when it enters its deadzone. This is done to avoid the IAC dropping straight back out of the deadzone again. Therefore, if the IAC enters its deadzone with Stage 1 in operation, the IAC will hold the Stage 1 at its current position rather than force the stage to a zero position. If the controller exits the deadzone back to Stage 1, the control action will resume at the previous point. If the controller exits the deadzone in Stage 2, then Stage 1 and its integral time would be forced to zero before Stage 2 was allowed to run. The opposite would be true if the controller went into deadzone with Stage 2 operating. If the parameter is set to On then the IAC zeros the operational stage as the controller enters the deadzone. In some systems this may cause hunting.	On or Off	Off
	Boost Stage This parameter selects which stage is boosted when the controller is in a boost condition.	1 or 2	1
	Boost in Occupied Period 1 This parameter selects whether the controller stage should be boosted to 100% when it enters the first occupied period of each day. The boost will be held until the set value is reached if Integral Action Dumping is OFF. Controls to deadzone if Integral Action dumping is ON.	Yes or No	No
	Boost in Occupied Period 2 As for Boost is Occupied Period 1 but for the second occupied period of each day.	Yes or No	No
	Boost (review only) This parameter shows the influence boost is having on the currently active stage. As boost overrides the stage fully on.	On or Off	–
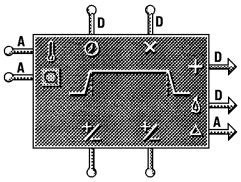	**OPTIMISER MODULE** x 2 The optimiser module is self learning with optimum on and off, selectable linear or BRESTART (logarithmic) optimisation and histogram display. The optimiser can also be selected for heating or cooling plant operation. The module has its own time schedule to set the occupancy times. Inputs to the module include space sensor, outside sensor(s) and remote setting. The module outputs are boost on and plant on which would be connected to the controllers boost and occupied override inputs respectively.		
	Main Sensor (review only) Displays the actual space sensor value.	–10,000 to 10,000	–
	Actual Setpoint (review only) This displays the actual setpoint used by the optimiser.	–10,000 to 10,000	–
	Integral Action Dumping On The optimiser set point must be equal to the controller set value minus the appropriate deadzone. **Integral Action Dumping Off** The optimiser set point must equal the controller set value. **NOTE:-** If the remote set point input is used then it will set this value and it will override the "Occupancy Set point".		
	Remote Setpoint (review only) This is the actual value on the setpoint input of the optimiser module and is usually set from an RPW.	–10,000 to 10,000	–
	Optimum On Influence (review only, optional) This parameter displays the actual amount of time to be added to the calculated boost time. This value is usually used to supply the optimiser with an outside influence to take account of low (usually below 10°C) outside temperatures. This value is supplied to the optimiser through the influence analogue input. If this is an outside influence it is derived from a look-up table module that is fed by an outside temperature sensor. This value is subtracted from the optimum ON time.	–10,000 to 10,000 mins	–
	Optimum Off Influence (review only, optional) As for Optimum On influence but the value is subtracted from the calculated optimum off time.	–10,000 to 10,000 mins	–

MODULES AND FUNCTIONS

Bubbleland Symbol	Module	Range	Default
CONTROL MODULES (Cont.)			
	Early Optimum Off (review only) '- - -' is normally displayed unless the optimiser is in an optimum off period and the space temperature falls below the optimum off set point. At this point the parameter displays the number of minutes left until the end of occupancy time. This same value is also output from the module as an analogue signal.	0 to 10,000 mins	- - -
	Optimiser Running? (review only) This allows you to see whether the optimiser has been disabled by the time lost input of the optimiser module.	Yes or No	–
	Learning is (review only) This allows you to see whether the self learning has been disabled by the optimiser module digital input or from the "Enable Learning" parameter.	On or Off	–
	Schedule Mode (review only) This code displays the section of the operating schedule the optimiser is currently in. Morning = before occupancy. Day = during occupancy. Night = after occupancy	Morning, Day, Night	–
	Optimiser Status (review only) Displays the current status of the optimiser. Waiting = the optimiser is waiting to start a boost or run down period. Boosting = boost is in progress. Terminate = function (i.e. boost, run down etc.) has been stopped. Run down = run down is in progress.	Waiting,Terminate, Boosting, Run Down	–
	Optimiser Time (review only) This displays the current time as seen by the optimiser.	0000 to 2359	–
	Next Change Due (review only) This displays the calculated time for the next change of output for the optimiser module.		
	If no calculation has been made because, for instance, the next day is off then '4800 waiting' is displayed.	0000 to 2359 and Monday to Sunday	–
	Schedule Displayed in a tabular format with one ON/OFF per days and a 7 day week. The ON and OFF times must be set in 24 hour format i.e. 3:00 AM is set as 0300. If the time schedule is to be OFF for the day then the ON and OFF times should be set to 0000 (Saturday and Sunday default to OFF).	0000 to 2359	Monday to Friday 0800,1700 Saturday to Sunday 0000, 0000
	Clear Histogram This is used to clear the histogram data if required.	Yes or No	No
	Occupancy Setpoint This is the setpoint to be used by the optimiser.	–10,000 to 10,000	19
	NOTE:- If the remote setpoint input is used then that will override the Occupancy Setpoint.		
	Optimiser Direction This sets the optimiser to operate a heating or cooling plant.	Heating or Cooling	Heating
	Optimiser Algorithm This selects the type of pre-heat used by the optimiser. Logarithmic pre-heat is based on the BRE recommended BRESTART curve and linear is the standard Satchwell type.	Linear or Logarithmic	Linear
	Design Pre-Heat This parameter allows the design pre-heat to be set in minutes per input unit.	0 to 10,000 Mins/unit	20 Mins/unit
	Advanced Pre-Heat This parameter allows the advanced pre-heat to be set in minutes per input unit. This value is used in place of DPH if the preceeding day(s) were off.	0 to 10,000 Mins/unit	25 Mins/unit
	Enable Learning This parameter is used to turn self learning on or off.	Yes or No	Yes
	Learning Ratio This parameter sets the percentage self learning ratio.	0 to 100%	10%
	Enable Optimum Off This parameter is used to turn on and off the optimum off function.	Yes or No	Yes
	Design Optimum Off Time This parameter allows the run down time to be set in minutes per input unit.	0 to 10,000 Mins/unit	30 Mins/unit
	Optimum Off Setpoint This sets the minimum inside temperature at the end of the occupancy period.	–10,000 to 10,000	19

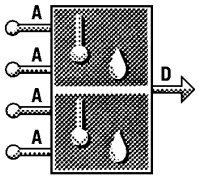

ENTHALPY COMPARATOR MODULE x 1

The Enthalpy Comparator module consists of two pairs of temperature and humidity inputs. The Enthalpy is calculated from each pair of temperature/humidity inputs. The output is on if the top pair of inputs have a greater enthalpy (total heat content) than the bottom pair. Typically this module is used to compare the enthalpy of the recirculated air and fresh air and to override the controller to minimum or maximum fresh air depending on application.

MODULES AND FUNCTIONS

Bubbleland Symbol	Module	Range	Default
	CONTROL MODULES (Cont.)		
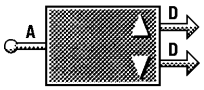	**PULSED PAIR DRIVER MODULE** x 4		
	Stroke Time This parameter allows the actuator stroke time to be set and is used by the IAC to determine the position of the actuator on the output stage.	0 to 10,000 Seconds	65 Secs
	Run On Time This parameter sets the maximum actuator run on time. The output will be turned off if the pulse pair driver has been running in one direction for longer than the programmed Run On Time.	0 to 10,000 Seconds	600 Secs
	Action (review only) This parameter displays the current output state of the stage.	Stopped, Increasing, Decreasing, at Minimum or at Maximum	–
	Current Position as a percentage of stroke (review only) This parameter displays the approximate position of the actuator as a percentage of its full stroke, where 0 = fully Closed and 100 = fully Open.	0 to 100%	–
	Current Run Time (review only) This parameter displays the number of seconds that the actuator has been running in one direction. The number of seconds is reset to zero when the direction of movement changes.	0 to 3,600 Seconds	–
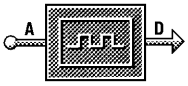	**PULSE WIDTH MODULATION MODULE** x 6		
	Cycle Period The length of the cycle period corresponds to the pulse time required for 100% opening of the wax actuator. This parameter allows the cycle period to be set. The IAC then uses this time to work out the length of pulse required to position the actuator when it is being controlled.	1 to 10,000 Seconds	20 Secs
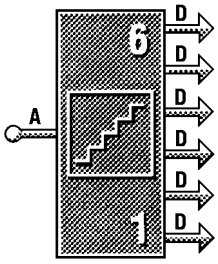	**STEP DRIVER MODULE** x 4 When driving the step driver module from a voltage or control module stage output then values between 0 and 100 should be set where 0 = 0V or fully Off and 100 = 10V or fully On.		
	Step 1 Switch on Point (Bottom Step) This parameter is used to set the switch on point for the step.	0 to 10,000	10
	Step 2 Switch on Point This parameter is used to set the switch on point for the step.	0 to 10,000	20
	Step 3 Switch on Point This parameter is used to set the switch on point for the step.	0 to 10,000	40
	Step 4 Switch on Point This parameter is used to set the switch on point for the step.	0 to 10,000	60
	Step 5 Switch on Point This parameter is used to set the switch on point for the step.	0 to 10,000	80
	Step 6 Switch on Point (Top Step) This parameter is used to set the switch on point for the step.	0 to 10,000	90
	Switching Hysteresis This allows the hysteresis to be set for all the stages and should always be set to less than the smallest gap between steps, this should be done to avoid erratic control.	0 to 100	5
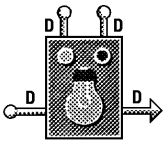	**LIGHTING CONTROL MODULE** x 1 This module is used to switch the lighting on and off. The primary input is normally connected to the timeschedule On output(s). The two override inputs can be used to override the lighting On or Off. The digital output is then used to switch the lights.		
	Status (review only) This parameter displays the actual lighting output state.	Off or On	–
	DIP 1 The lights can be set up to dip off at a point before they are set to go off. This parameter allows the point for the dip to occur to be set. Set to 0 to disable the dip.	0 to 10,000 Seconds	0 Secs
	DIP 2 A second dip is allowed as a final warning that the lighting is about to be switched off. The point at which this dip occurs is set from this parameter. Set to 0 to disable the dip.	0 to 10,000 Seconds	0 Secs
	DIP Time This sets the length of time that the lights dip off for.	0 to 10,000 Seconds	1 Sec
	Computer Override This parameter is used to override the lighting schedule from the computer.		
	NOTE:- The lights will not dip they will be turned off immediately the IAC receives the signal.		

MODULES AND FUNCTIONS

Bubbleland Symbol	Module	Range	Default
	MISCELLANEOUS MODULES		
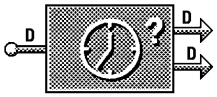	**CLOCK MODULE** x 1 The Clock module is used by the IAC to keep the time. The digital input is used to re-synchronize the clock when the IAC is used in a standalone mode. The digital outputs are used to show the clock state e.g. time lost (labelled "?") and clock running. **NOTES:-** 1. Touch-screen The Touch-screen will update the time on all IACs on its SUB LAN once per day (at midnight). The Touch-screen monitors the IAC clocks for time lost, on seeing this the time is updated on all the IACs. The Touch-screen will update all the IACs if its own time is updated. 2. Computer Running Satchnet The computer will update the time on LAN sites every 5 minutes. WAN sites are updated when they are contacted.		
	Re-synchronization Time If the IAC is operating in a standalone mode then it is desirable to re-synchronize the clock on a regular basis. This is achieved from an external time switch momentary contact and this setting tells the IAC at what time this will occur.	0000 to 2359	0000
	Re-synchronization Day of the Week This parameter tells the IAC on what day the re-synchronization contact will operate. If the clock is set to be re-synchronized every day set this parameter to All.	Monday to Sunday or All	Monday
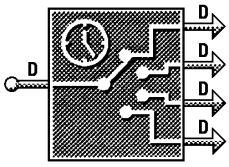	**TIMESCHEDULE MODULES** x 4 The Timeschedule module has a single digital input which should be connected to the clock running output of the clock module. The four digital outputs represent the first on, first off, second on and second off times respectively and each would be connected to the relevant input, for instance controller overrides. Displayed in tabular format with 2 On/Off's per day and a 7 day week. The On and Off times must be set in 24 hour format i.e. 3:00 AM is set as 0300.		
	If only one ON/OFF is required for a day then the First ON time is set and also the First OFF. The Second ON and second OFF should be set to the same time as the First OFF. If the IAC is to be off all day set both ONs and OFFs to 0000.	0000 to 2359	0800, 1700 1700, 1700
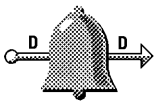	**ALARM MODULES** x 12 The Alarm module is used to monitor a digital signal, when the signal is on the alarm module registers an alarm present and gives a digital signal out. When the alarm is acknowledged from the computer, the output is turned off. **NOTE:-** The alarm is triggered by the input to the module being on. For temperature/voltage alarms use a threshold module to give a switched output.		
	Alarm Status (review only) This parameter shows the state of the alarm.	No Alarm, Alarm, Accept Alarm or Alarm Acknowledge	–
	Accept Alarm This parameter allows the alarms to be acknowledged.	Yes or No	–
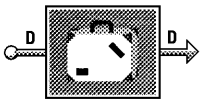	**HOLIDAY MODULE** x 6 The Holiday module allows a holiday to be set in advance. The Holiday Enable Digital input must be on to allow the preset holiday to take place. This input would normally be connected to the clock running output. When a holiday condition exists the module output will be on and could be connected to, for instance, the night or relaxed override input of one or more control modules. **NOTE:-** The holiday schedule will only operate if it is connected and set before the holiday start date.		
	Current State (review only) Shows the current state of the holiday module digital output.	On or Off	–
	Holiday Enable Manual override to disable the holiday from the computer if required	Yes or No	Yes
	Start of Holiday Week Number This sets the week number that the holiday is to start in.	1 to 53	1
	Start of Holiday Day This sets the Day that the holiday is to start on.	Monday to Sunday	Monday
	End of Holiday Week Number This sets the week number that the holiday will finish in.	1 to 53	1
	End of Holiday Day This sets the Day that the holiday will finish on.	Monday to Sunday	Monday

MODULES AND FUNCTIONS

Bubbleland Symbol	Module	Range	Default
	MISCELLANEOUS MODULES (Cont.)		
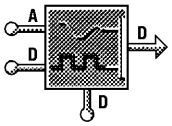	**LOGGING MODULE** x 3 The Logging module will log 50 analogue values and 50 digital states. Each value/state log will be taken when a second digital input is momentarily set to ON. A digital output is switched ON when the logging module is full. This output can be used to disable the logging module. If the logging module is not disabled it will continue to log and overwrite the oldest logged information. Logged data can be viewed via the IAC 600 Touch-screen.		
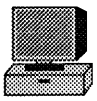	**SYSTEM MODULE** x 1 (This module may be placed on screen as often as required) This module has no inputs or outputs and is intended to give information on system settings and allow them to be changed. This module would normally only be used when commissioning		
	Preset Application (0 = Software Preset) This displays the current preset application number and allows a new one to be loaded.	0 to 4	–
	Detector Speed This allows the detector sensing speed to be set. The Fast speed should only be set when using simulators for the detector inputs.		
	NOTE:- This must be set to Normal for normal controller operation.	Fast or Normal	Normal
	Force Reset This button is used to force the controller to reset.	Yes or No	No
	Reload Defaults This button is used to force the controller to reload all of its default values.		
	NOTE:- This will overwrite any parameters set by the user originally. The controller is also automatically reset.	Yes or No	No
	Null Outputs This button is used to send the controller into its Null Output mode. In this mode all controller outputs are turned off and all module links are disconnected. On leaving this mode the module links are re-connected and the outputs resume normal operation. Null Output is the highest priority override on the controller. If the IAC keeps sending itself into Null Output Mode, reload defaults should be used to clear it. This will overwrite any parameters set by the user.	Yes or No	No
	Detector Sequence This setting selects the sequence in which the detectors are read. The default setting is 0 and this setting gives an equal priority to all detectors. Selecting 1 will give priority to temperature (resistive) input 1 and 2 gives priority to analogue (Voltage) input 1. Sequences 1 or 2 should be used when a fast reacting loop must be controlled.	0 to 2	0
	REFERENCE MODULES		
	**DIGITAL MONITOR MODULE** x 8 This module displays the state of any digital output connected to it. This would generally be used for checking module operation.		
	Current State (review only) This parameter displays the current input state of the module.	On or Off	–
	**DIGITAL REFERENCE MODULE** x 8 This module gives a single digital output that can be turned on or off by clicking on the module. This would generally be used for checking module operation.		
	Current State This parameter allows the user to change the output of the module.	On or Off	Off
	**ANALOGUE MONITOR MODULE** x 12 This module displays the current analogue value of any analogue output connected to it. The value can be scaled in the same way as with scaling modules however there is no physical output just a value. This would generally be used for checking module operation or presenting a scaled value. For instance to display temperatures to 1 decimal place, set the input minimum to −40, the output minimum to −400, the input maximum to 150 and the output maximum to 1500. The **Value/10** parameter will now display temperature to 1 decimal place.		
	Value (review only) This parameter displays the analogue input value AFTER the scaling has been calculated.	–32,000 to 32,000	–
	Value/10 This parameter displays the analogue input value AFTER the scaling has been carried out. this value is divided by 10.	–32,000 to 32,000	0
	Input Minimum Value	–10,000 to 10,000	0
	Output Minimum Value	–32,000 to 32,000	0
	Input Maximum Value	–10,000 to 10,000	100
	Output Maximum Value	–32,000 to 32,000	100

MODULES AND FUNCTIONS

Bubbleland Symbol	Module	Range	Default
	REFERENCE MODULES (Cont.)		
	ANALOGUE REFERENCE MODULE x 12 This module gives an analogue value output that can be set by the user. The output value can be scaled in the same way as on a scaling module to allow input of values to a number of decimal places or in different units. This would generally be used for checking module operation.		
	Reference Value This parameter displays and allows the user to set the analogue output value BEFORE the scaling has been calculated.	–10,000 to 10,000	–
	Input Minimum Value	–32,000 to 32,000	0
	Output Minimum Value	–10,000 to 10,000	0
	Input Maximum Value	–32,000 to 32,000	100
	Output Maximum Value	–10,000 to 10,000	100
	FLASHER MODULE x 1 (The module may be placed on screen as often as required) The Flasher module gives a pulsed digital output the rate of which can be set by the user. As the rate is arbitrary and will vary with the controller workload, it should be used for non critical applications only.		
	Flash Rate The flash rate is set in arbitrary units 0 being the fastest and 100 the slowest. The on and off times are of similar length.	0 to 100	5
	DIGITAL ONE MODULE x 1 (The module may be placed on screen as often as required) This module gives a digital output that is always ON. This would generally be used for checking module operation.		
	DIGITAL ZERO MODULE x 1 (The module may be placed on screen as often as required) This module gives a digital output that is always OFF. This would generally be used for checking module operation.		
	POWER ON REFERENCE MODULE x 1 (The module may be placed on screen as often as required) This module gives a single pulsed on digital output each time the controller power is switched on or the controller is reset. This can be used to enable a sequence of events to occur each time power to the controller is reinstated. These events could, for instance, be start up delays etc. The output can be latched if required.		

PERMISSIBLE CONNECTIONS

OUTPUTS	INPUTS
A	A
D	D

A = Analogue –10,000 to 10,000

D = Digital ON or OFF

Voltage signals 0 = 0V, 50 = 5V, 100 = 10V
Controller output signals 0 = off, 100 = full on

EXAMPLE COMPENSATION SET-UP

To configure a controller module to operate a compensation scheme connect the modules as follows:

Water/Air Supply sensor connected to controller module main sensor input.

Outside sensor connected to RPW input via a look-up table module.

Wind sensor connected to the 0 to 10 Volt reset input (optional).

Other inputs and outputs would be connected as for normal control schemes.

Example Look-Up Table settings for the graph below:-

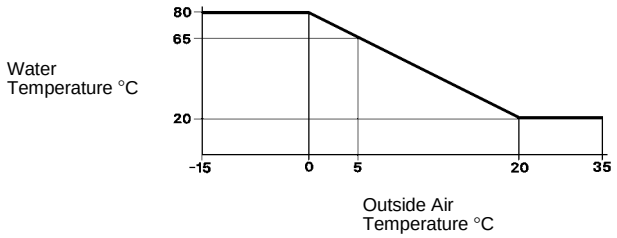

OUTSIDE TEMP.	SUPPLY SET VALUE
1: IN 0	OUT 80
2: IN 5	OUT 65
3: IN 20	OUT 20
Settings 4 to 11 set to "---" (unused).	

APPLICATIONS

The IAC has a number of preset applications built in. The preset applications are selected from the 8 way bit switch on the IAC.

It is important to note that **any** application may be customised by using the computer and it will be stored in the IAC even in the event of a power failure. The supplied applications are merely a starting point for a system but if the supplied application suits your system it may be used as it stands.

Hardware Preset Applications

There are currently 4 preset applications that can be selected from the 8 way bit switch and they are as follows:-

Preset 0 – Fully configurable

No links are made between modules. This preset should be chosen if you wish to configure the IAC completely.

APPLICATION NOTES

1. If an application is to be used on an IAC via a computer select software preset 0. Use the configuration library in the Satchnet Computer Software to load the required preset application from disk. Then send the configuration to the controller.
2. Most applications include one or more timeschedules. If the IAC is connected to a computer then the IAC will operate on its own timeschedule. If it is not then the IAC will default to its occupied state.
3. Most applications can be used as single stage if required by setting the unused stage as follows:-

   Proportional Band = 10,000
   Integral Action Time = 0
   Derivative Action Time = 0
   Ramp Time = 0

4. When outputs are duplicated either the 24Vac or 0 to 10Vdc output can be used as required as they operate in parallel.

PRESET 1 – Boiler Compensation and separate HWS System

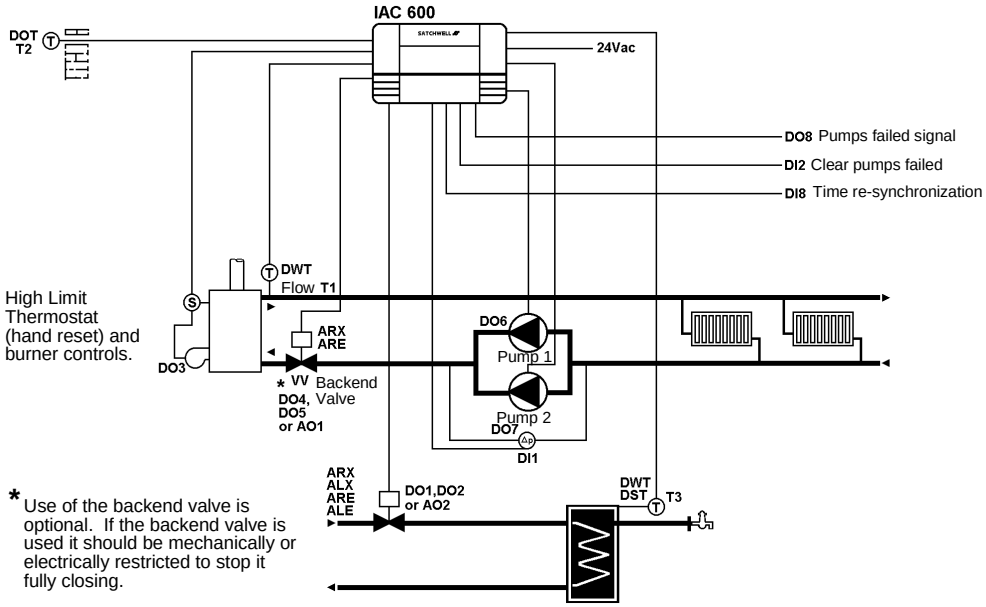

Fig.1

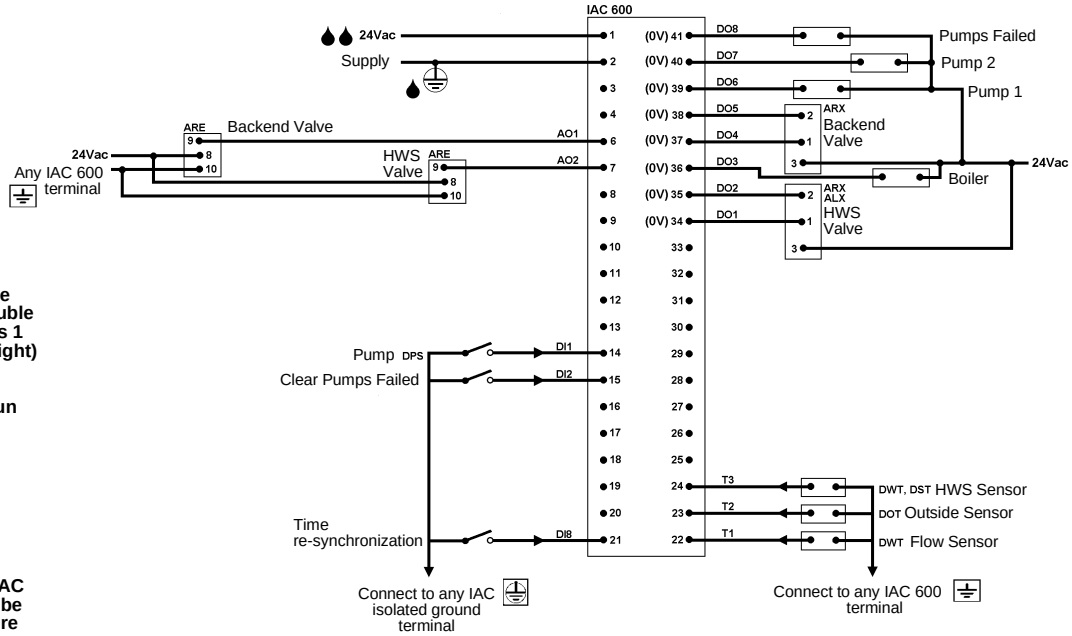

Note:–
The actual terminal block is a double block running across the bottom of the IAC. The top (double height) block contains terminals 1 to 33 and the bottom (single height) contains 34 to 41 and all of the Ground and isolated Ground terminals. Terminal numbers run from left to right.

Ensure Terminal 2 is earthed.

The 24Vac Supply must be fused with a 2A fuse.

Terminal 5 is not used.

If an earth busbar is to be used then it must be connected to a single Ground terminal on the IAC by a single cable which should be as short as possible and no more than 150mm long. Earth wire minimum 30/0.25 (1.5mm^2) Stranded Cable.

TIME SCHEDULES

08:00 to 17:00

Connected to the compensator and HWS loops.

The time re-synchronization input will re-synchronize the IAC time to midnight Monday.

COMPENSATOR

Schedule	OUTSIDE	SUPPLY
	0	80
	10	50
	20	20

The outside temperature value is fed into a look-up table. The result is passed to the controller RPW input and is used to set the controller set value.

Proportional Band	10
Integral Action	300
Derivative Action	0
Ramp Time	60
Sample Time	10

HWS

The HWS valve will open at 38°C and close at 40°C. Note this is an on/off action and is not modulating.

BOILER/BACKEND VALVE

The boiler and backend valve are both enabled when the control demand signal exceeds 10% and disabled when it drops below 5%. The boiler output has a hold off time of 15 Seconds and the backend valve output has hold off time of 5 Seconds.

The backend valve should be mechanically or electrically limited so that it remains open at a minimum of 10% to enable heat dissipation from within the boiler.

PUMPS

Two pump outputs are supplied, Pump 1 normally runs when the controller is requesting heat. In the event of pump 1 failing to run, a differential pressure switch signals the IAC which enables pump 2. In the event of pump 2 failing the "pumps failed" output is enabled. A "clear pumps failed" input is supplied to enable the failed pumps to be used once they have been repaired or reset.

VALVE OPTIONS

Both the HWS and backend valve actuators may be 0 to 10Vdc or 24Vac driven, it should be noted however that valve operation in all cases is purely on/off and not modulating.

PRESET 2 – 2 Boiler Sequence Control (compensated) with a separate HWS System

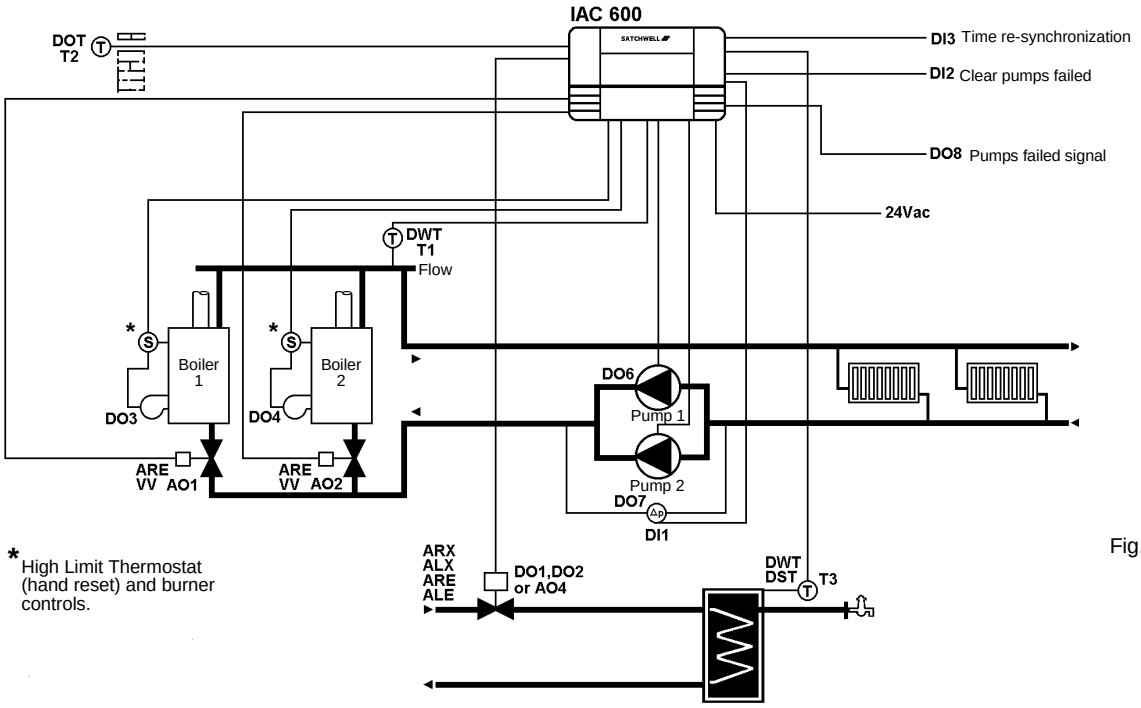

* High Limit Thermostat (hand reset) and burner controls.

Fig.2

Note:–
The actual terminal block is a double block running across the bottom of the IAC. The top (double height) block contains terminals 1 to 33 and the bottom (single height) contains 34 to 41 and all of the Ground and isolated Ground terminals. Terminal numbers run from left to right.

Ensure Terminal 2 is earthed.

The 24Vac Supply must be fused with a 2A fuse.

Terminal 5 is not used.

If an earth busbar is to be used then it must be connected to a single Ground terminal on the IAC by a single cable which should be as short as possible and no more than 150mm long. Earth wire minimum 30/0.25 (1.5mm^2) Stranded Cable.

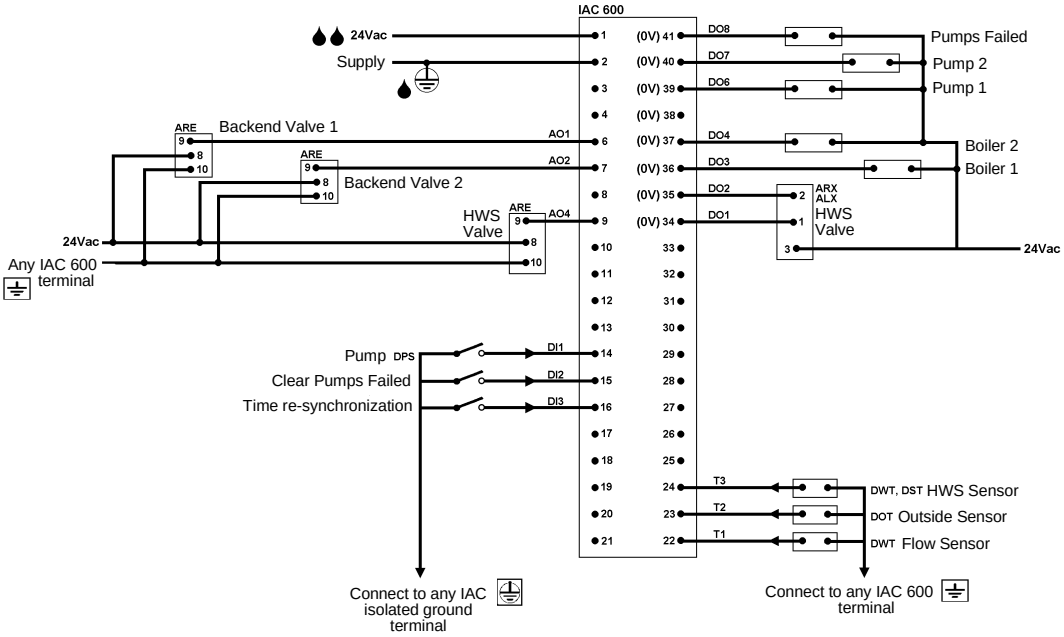

TIME SCHEDULES

08:00 to 17:00

Connected to the compensator and HWS loops.

The time re-synchronization input will re-synchronize the IAC time to midnight Monday.

COMPENSATOR

Schedule	OUTSIDE	SUPPLY
	0	80
	10	50
	20	20

The outside temperature value is fed into a look-up table. The result is passed to the controller RPW input and is used to set the controller set value.

Proportional Band	10
Integral Action	300
Derivative Action	0
Ramp Time	60
Sample Time	10

BOILER/BACKEND VALVE

The lead boiler backend valve is always held open with the other one being enabled on demand. The lead boiler rotates every 100 hours. The lead boiler is enabled when the control demand signal exceeds 33% with the second boiler and backend valve being enabled a 66%. There is a 5% hysteresis on both steps. The call for heat signal from the HWS is linked to the lead boiler to ensure that the boiler fires if HWS is required under low load conditions.

PUMPS

Two pump outputs are supplied, Pump 1 normally runs when the controller is requesting heat. In the event of pump 1 failing to run a differential pressure switch signals the IAC which enables pump 2. In the event of pump 2 failing the "pumps failed" outputs is enabled. A "clear pumps failed" input is supplied to enable the failed pumps to be used once they have been repaired or reset.

VALVE OPTIONS

Both the HWS and backend valve actuators may be 0 to 10Vdc or 24Vac driven, it should be noted however that valve operation in all cases is purely on/off and not modulating.

PRESET 3 – 3 Boiler Sequence Control (compensated) with a separate HWS System

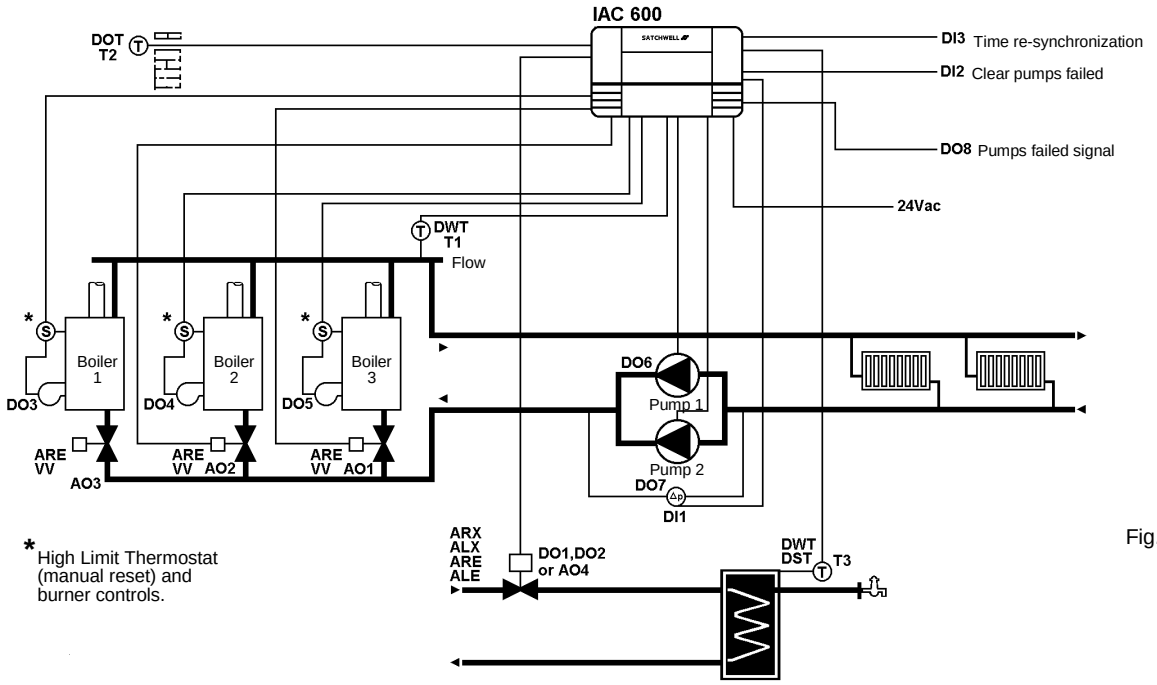

Fig.3

Note:–
The actual terminal block is a double block running across the bottom of the IAC. The top (double height) block contains terminals 1 to 33 and the bottom (single height) contains 34 to 41 and all of the Ground and isolated Ground terminals. Terminal numbers run from left to right.

Ensure Terminal 2 is earthed.

The 24Vac Supply must be fused with a 2A fuse.

Terminal 5 is not used.

If an earth busbar is to be used then it must be connected to a single Ground terminal on the IAC by a single cable which should be as short as possible and no more than 150mm long. Earth wire minimum 30/0.25 (1.5mm^2) Stranded Cable.

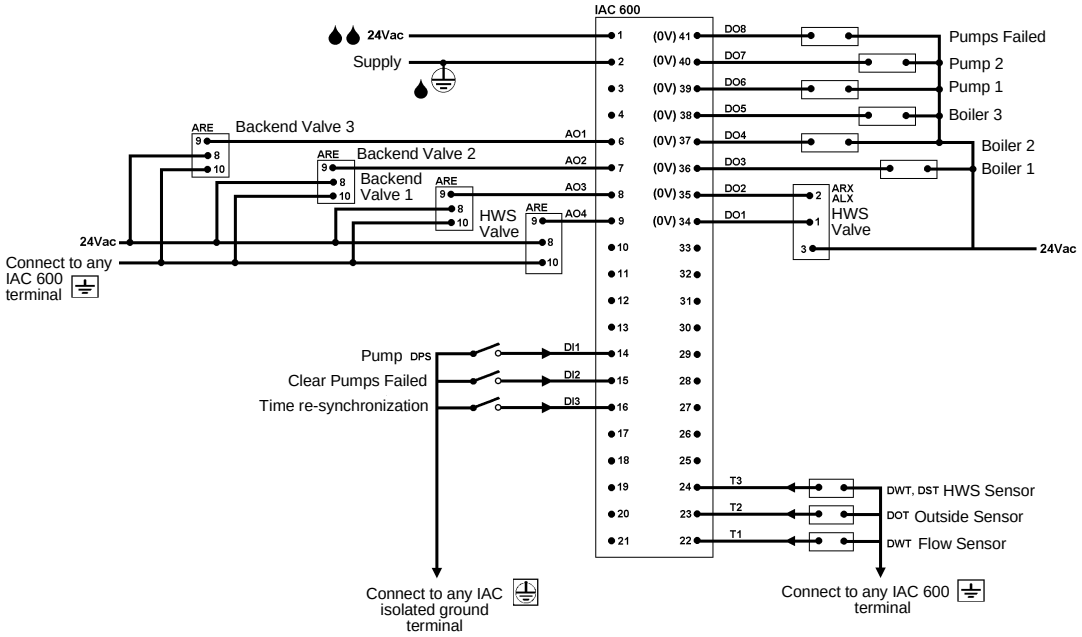

TIME SCHEDULES

08:00 to 17:00

Connected to the compensator and HWS loops.

The time re-synchronization input will re-synchronize the IAC time to midnight Monday.

COMPENSATOR

Schedule	OUTSIDE	SUPPLY
	0	80
	10	50
	20	20

The outside temperature value is fed into a look-up table. The result is passed to the controller RPW input and is used to set the controller set value.

Proportional Band	10
Integral Action	300
Derivative Action	0
Ramp Time	60
Sample Time	10

BOILER/BACKEND VALVE

The lead boiler backend valve is always held open, with the others being enabled on demand. The lead boiler rotates every 100 hours. The lead boiler is enabled when the control demand signal exceeds 25% with the second boiler and backend valve being enabled at 50% and the third at 75%. There is a 5% hysteresis on all three steps. The call for heat signal from the HWS is linked to the lead boiler to ensure that the boiler fires if HWS is required under low load conditions.

PUMPS

Two pump outputs are supplied, Pump 1 normally runs when the controller is requesting heat. In the event of pump 1 failing to run, a differential pressure switch signals the IAC which enables pump 2. In the event of pump 2 failing the "pumps failed" output is enabled. A "clear pumps failed" input is supplied to enable the failed pumps to be used once they have been repaired or reset.

VALVE OPTIONS

Both the HWS and backend valve actuators may be 0 to 10Vdc or 24Vac driven, it should be noted however that valve operation in all cases is purely on/off and not modulating.

PRESET 4 – Full air-conditioning including variable Fan Speed Control

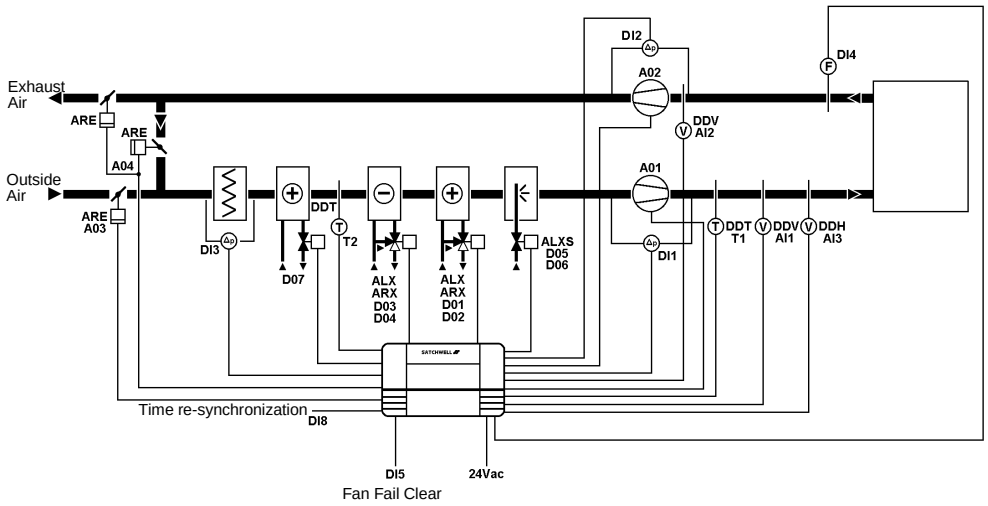

Fig.4

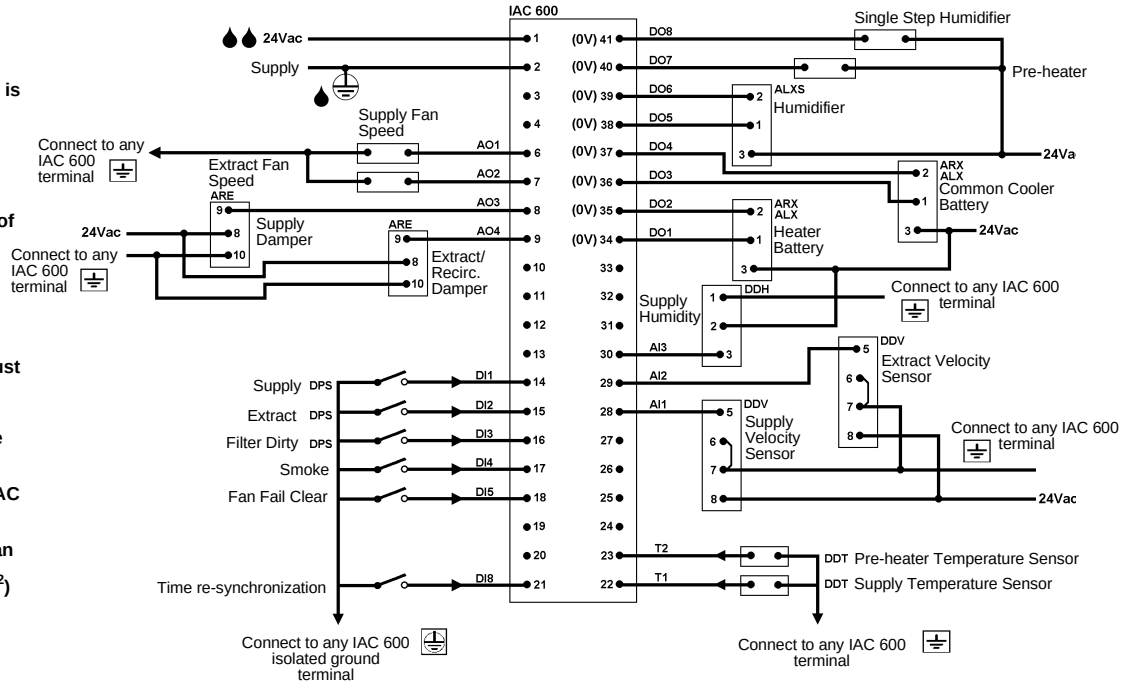

Note:–
The actual terminal block is a double block running across the bottom of the IAC. The top (double height) block contains terminals 1 to 33 and the bottom (single height) contains 34 to 41 and all of the Ground and isolated Ground terminals. Terminal numbers run from left to right.

Ensure Terminal 2 is earthed.

The 24Vac Supply must be fused with a 2A fuse.

Terminal 5 is not used.

If an earth busbar is to be used then it must be connected to a single Ground terminal on the IAC by a single cable which should be as short as possible and no more than 150mm long. Earth wire minimum 30/0.25 (1.5mm^2) Stranded Cable.

TIME SCHEDULES

08:00 to 17:00

Connected to the temperature and humidity loops.

The time re-synchronization input will re-synchronize the IAC time to midnight Monday.

TEMPERATURE LOOP

Set value	50°C
Stage 1 and 2	
Proportional Band	10
Integral Action	300
Derivative Action	0
Ramp Time	60
Sample Time	10

The supply and extract fans are speed controlled from the velocity sensors, their set values being determined by the heating and cooling control demand signals.

The main temperature loop operates a heater battery and common cooler battery. The dampers are modulated from the heating and cooling control demand signals and have a minimum fresh air setting of 30%. In the event of the smoke switch activating the recirculation/extract dampers will go to 100%, the supply damper to 0%, the supply fan will go to 0% and the extract fan to 75% of the full fan speed.

The temperature loop is overridden off if the fans stop.

HUMIDITY LOOP

Set value	19% RH
Stage 1 and 2	
Proportional Band	10
Integral Action	300
Derivative Action	0
Ramp Time	60
Sample Time	10

The humidity loop operates a humidifier and common cooler battery. The humidifier can be a single switched output operating at 0% of the control signal or a modulating valve and actuator.

The humidity loop is overridden off if the fans stop.

PREHEATER LOOP

The preheater output is a simple on/off triggered at a set temperature.

On at 1°C
Off at 1°C

SMOKE OVERRIDE

Under smoke conditions the following actions will betaken:

Supply Damper	0%
Recirculation/Extract Damper	100%
Supply Fan	Off
Extract Fan	75%

FAN SPEED LOOPS

Stage 1 and 2	
Proportional Band	10
Integral Action	300
Derivative Action	0
Ramp Time	60
Sample Time	10

Look-up Table	IN	OUT
	0	0
	10	2
	20	3
	30	4
	40	6
	50	10
	60	16
	70	25
	80	40
	90	63
	100	100

There are two fan speed control loops, one for the supply and one for the extract fan. The set values for the fan speed loops are derived from the temperature loop heating and cooling control signals.

If the fan fails the temperature and humidity controllers are overridden off. A digital input is supplied to clear the fan failure and remove the controller override.

REMOTE OPERATION AND INTERROGATION

The IAC is connected, as part of a network, to a remote computer via the Serial Link, all of the setting and interrogation functions are carried out at the computer terminal.

Each IAC will be identified by a unique Address Code which is set up via switch SW1 located to the right of the upper terminal block. This allows the computer to select the desired IAC on the network. Up to a maximum of 32 IAC Controllers (or similar compatible devices) may be connected to a LAN (more if a separate MIU or IAC Touch-screen is used).

TOUCH-SCREEN SUB LAN ADDRESS

If the IAC is on a Touch-screen Sub LAN then the address which the computer uses is as follows:-

((Touch-screen address – 64) x 100) + IAC set address

e.g. Touch-screen address = 68
IAC address = 3
Computer address for the IAC = ((68 – 64) x 100) +3 = 403

In this way it is possible for large sites to have a unique address for every network controller.

SETTING THE TOUCH-SCREEN ADDRESS

To set the Touch-screen address and Baud rate see the Touch-screen User Guide.

SETTING THE ADDRESS, BAUD RATE AND APPLICATION OF THE IAC 600 BASE UNIT

Instructions 1 to 4 will COLD START your IAC and clear out the memory.

1. Ensure all IAC outputs are disconnected from the plant.
2. Set bit switch 1 "ON". Set all other bit switches to "OFF" - see fig. 5.
3. Set bit switch 8 to "ON" and then back to "OFF", this will load preset 1.
4. Set all bit switches to "OFF". Set bit switch 8 to "ON" and then back to "OFF", this will load preset 0.
5. If you are using preset 0 you should now set the controller address. If you are using a hardware preset application set the application number on bit switches 1 to 6 and ensure that bit switch 7 is set to "OFF".
6. If the IAC is not to be connected to a computer then it is not necessary to set an address for it.
7. Once the Application Number is set it must be entered into the IAC by 'cold starting' the controller. This is achieved by setting bit switch 8 to "ON" and then setting bit switch 8 back to "OFF".

SW1 SWITCH (Increment No.)	POSITION		
	Off/ Open/0	On/ Closed/1	
1	0	1	Set Application Number
2	0	2	
3	0	4	
4	0	8	
5	0	16	
6	0	32	
7	Set Appli- cation	Set Address	
8	Run	Cold Start	

Example:

Switch settings as shown in Fig. 5.

Switch	Represents	
1	1	
2	0	
3	4	
4	0	
5	0	
6	0	
TOTAL =	5	Application Number
7	Set Application	
8	Run	

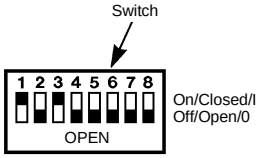

Fig.5

8. Set the controller address on bit switches 1 to 6 and set bit switch 7 to "ON". See fig.6.
9. Once the address has been set it must be entered into the IAC by 'cold starting' the controller. This is achieved by setting bit switch 8 to "ON" and then setting bit switch 8 back to "OFF".

SW1 SWITCH (Increment No.)	POSITION		
	Off/ Open/0	On/ Closed/1	
1	0	1	Set IAC Address
2	0	2	
3	0	4	
4	0	8	
5	0	16	
6	0	32	
7	Set Appli- cation	Set Address	
8	Run	Cold Start	

Example:

Switch settings as shown in Fig. 6.

Switch	Represents	
1	1	
2	0	
3	4	
4	0	
5	0	
6	32	
TOTAL =	37	Address
7	Set Address	
8	Run	

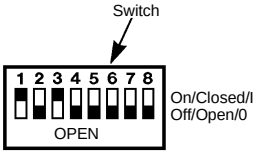

Fig.6

10. The IAC application and address has now been set up, the Baud rate is automatically set to 1200 Baud (this is done whenever the controller is cold started).

Notes:

1. Do not set more than one network device to the same address.
2. If a sub-LAN is used then addresses 1 to 31 can NOT be used on the main LAN.
3. Protocol and wiring information for OEM communications programmes are available from Marketing Department, Slough Office.
4. The IAC operates at 1200 Baud.

CONNECTION DIAGRAMS (Refer to Wiring Precautions on Page 22)

BASIC WIRING DIAGRAM FOR IAC BASE UNIT

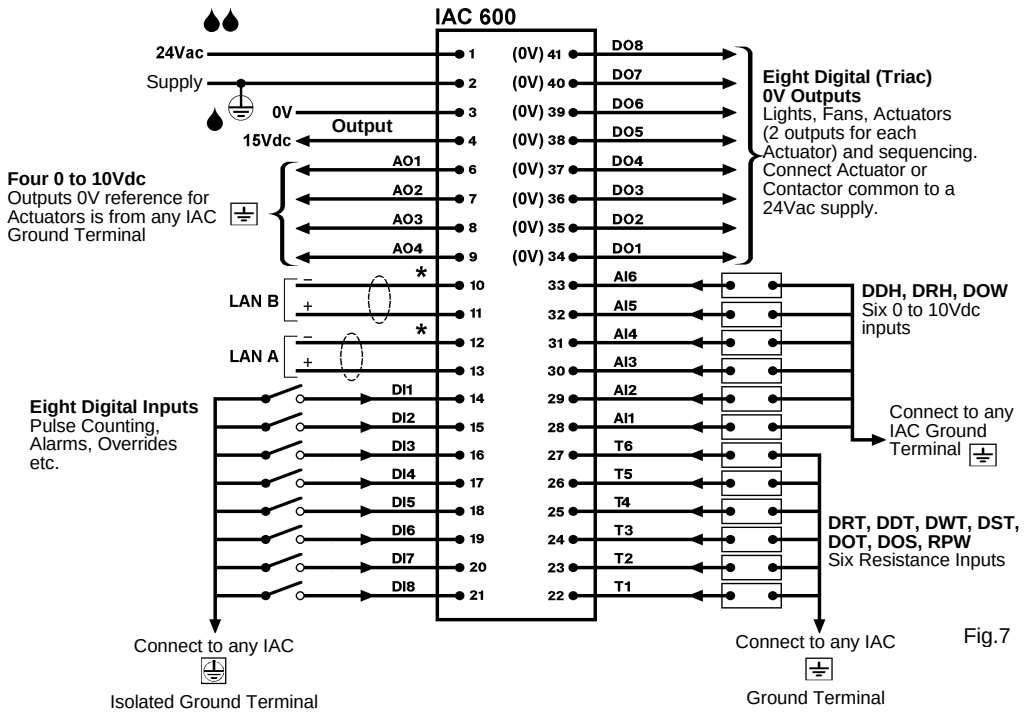

Fig.7

Note:-

The actual terminal block is a double block running across the bottom of the IAC. The top (double height) block contains terminals 1 to 33 and the bottom (single height) contains 34 to 41 and all of the Ground and Isolated Ground terminals. Terminal numbers run from left to right.

♦ Ensure Terminal 2 is earthed.

♦♦The 24Vac Supply must have a 2A fuse. The transformer must conform to EN 60742 - DS 25.00/ 25.001.

*** LAN A and LAN B should be screened with the screen earthed only on a verified good earth at the computer or MIU. LAN A and B screens should be connected to the isolated Ground Terminals of each of the IACs on the LAN. See DS 2.10A/2.951A.**

Terminal 5 is not used.

If an earth busbar is to be used then it must be connected to a single Ground Terminal on the IAC by a single cable which should be as short as possible and no more than 150mm long. Earth wire minimum 30/0.25 (1.5mm^2) Stranded Cable.

TEMPERATURE (RESISTIVE) INPUT USED AS A DIGITAL INPUT

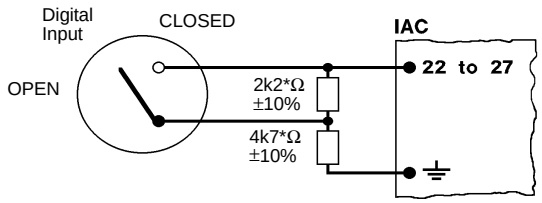

A threshold module should be set as below to create the digital signal.

* Resistances correct for the switching values shown below.

< 19°C contact open
≥ 19°C contact closed

Fig.8

ANALOGUE INPUT USED AS A DIGITAL INPUT

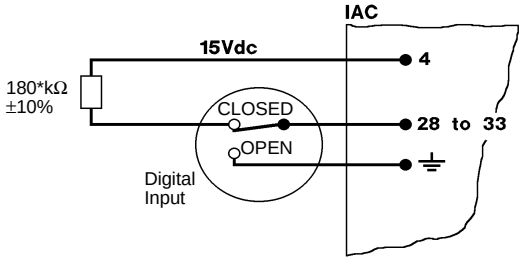

A threshold module should be set for the values shown below (note 5V = 50) to create the digital signal.

* Resistances correct for the default switching values of the IAC.

< 5Vdc contact open
≥ 5Vdc contact closed

Fig.9

REMOTE SETTING

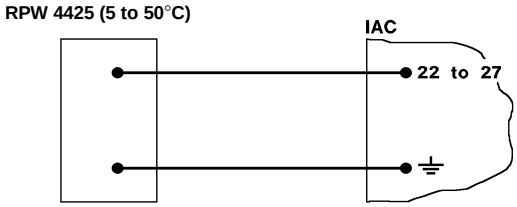

Fig.10

TEMPERATURE SENSING AND REMOTE SET VALUE FROM COMMON ROOM SENSOR

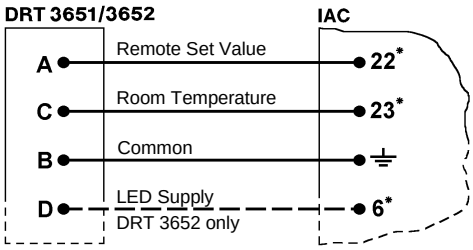

* Example shown for inputs 1 and 2 and Analogue Output 1 other Temperature (resistive) inputs and Analogue Outputs may be substituted if required.

Fig.11

IAC BASE UNITS ON A LAN (NO TOUCH-SCREENS)

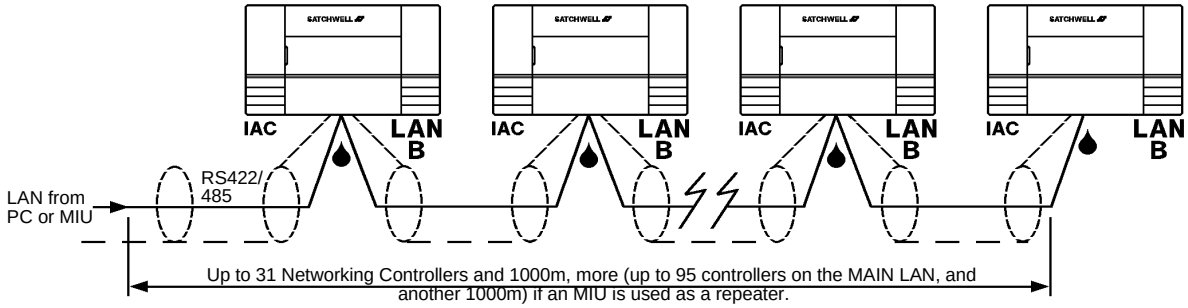

Fig.12

LAN A and LAN B should be screened with the screen earthed only on a verified good earth at the computer or MIU.

LAN A and B screens should be connected to the isolated Ground Terminals ⏚ of each of the IACs on the LAN - see Fig.8.

IAC TOUCH-SCREENS AND BASE UNITS ON A LAN

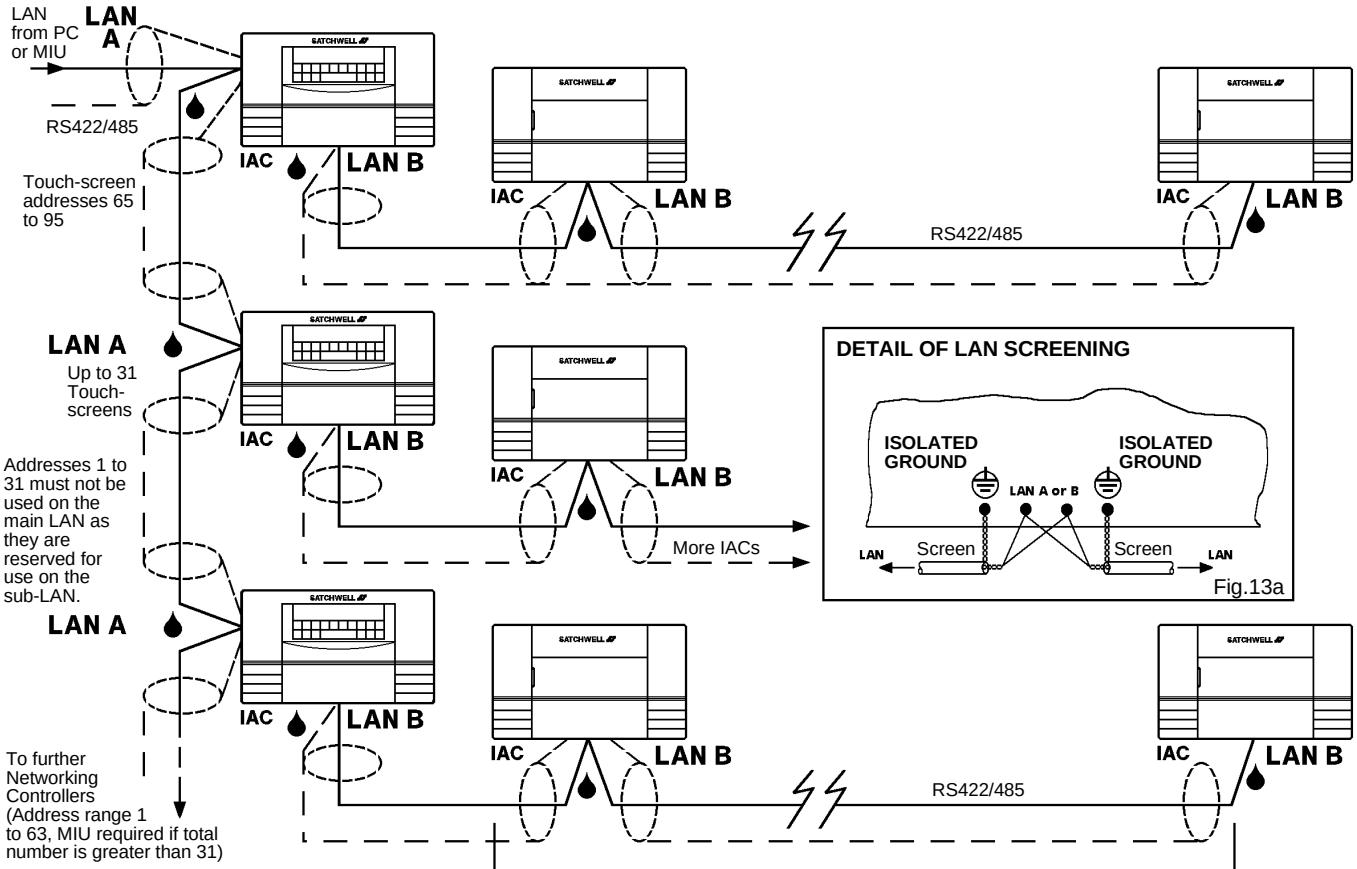

Fig.13

*The number of IAC controllers on a Touch-screen Sub-LAN is limited to a maximum of 31 base units including the one the Touch-screen is plugged into. Each Touch-screen can display up to 256 parameters.

Controllers (including MIUs) on the main LAN and sub-LAN must not have conflicting addresses. Controllers on different sub-LANs may use the same address. Ideally the sub-LAN addresses should be kept within a range so as not to use up all of the main LAN addresses.

LAN A and LAN B should be screened with the screen earthed only on a verified good earth at the computer or MIU.

LAN A and B screens should be connected to the isolated Ground Terminals ⏚ of each of the IACs on the LAN - see Fig.8.

REMOTE MOUNTED TOUCH-SCREEN USING KIT 565-2-601

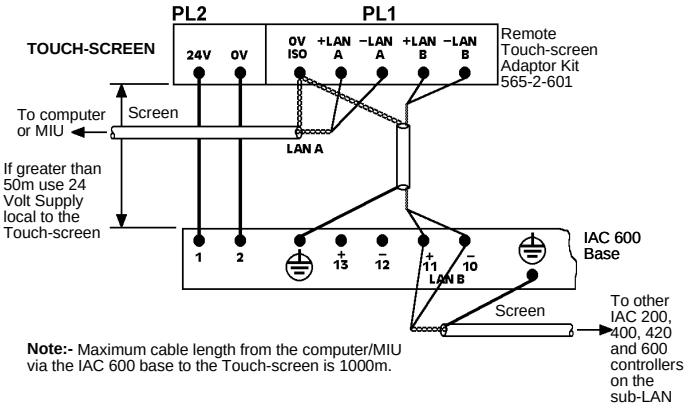

Note:- Maximum cable length from the computer/MIU via the IAC 600 base to the Touch-screen is 1000m.

Fig.14

REMOTE MOUNTED TOUCH-SCREEN USING KIT 565-2-601 CONNECTED DIRECT TO IAC 200, 400, 420 AND 600s

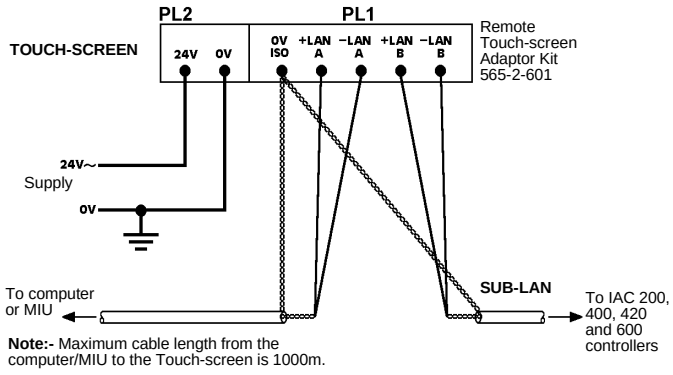

Note:- Maximum cable length from the computer/MIU to the Touch-screen is 1000m.

Fig.15

WIRING PRECAUTIONS

Wiring from IAC controller to:	Maximum length for 1.5mm^2 core unscreened cable	Maximum resistance per conductor
Sensors		
DRT (adjustable)	100m	10Ω
DRT (non-adjustable), DDT,	100m	15Ω
DWT, DST, DOT, DDU	100m	15Ω
Analogue inputs	100m	15Ω
Remote Setting Units		
RPW	100m	10Ω
Actuators		
AVU, ADU	50m	1Ω
ALX, ALXS, ARX, AVUX, ARUX ALE, ALES, ARE, ARES, AVUE, ARUE	100m	5Ω
24V~ Supply	100m	3Ω
0–10V dc Signal	100m	50Ω
Triac Outputs	100m	3Ω
Relays, time switches, override contacts etc.	100m	5Ω
Serial Link (terminals 10–11, 12–13) to EIA Standard RS 422/485	Twisted pair screened, run separately from any other cables dc resistance <30 ohm per 300 metre e.g. 24 AWG; 25 SWG (0.21mm^2). Maximum length 1000 metres (240 ohms max. dc loop resistance). Mutual capacitance <60 pF per metre.	
Serial Link to Remotely Mounted Touch-screen	Four core twisted pair screened cable, specification as above. Maximum cable run from computer/MIU via the IAC 600 base to the Touch-screen is 1000 metres. Touch-screen Adaptor Kit (565-2-601) **MUST** be used.	

Note 1: Where length exceeds figures in column 2 up to a maximum of 300m select cable size to comply with resistance in column 3 and use one of the following screening options:-

- Screened cable. Earth screen at controller end only. (Terminal 2 is an earth terminal)

Note 2: The Controller must have a verified good earth.

Note 3: The resistance between 2 and Earth must not exceed 0.5 ohm. Where several controllers are mounted in a group a separate wire should be run from 1 to a common earth terminal nearby. Do not loop the terminal 2s together in a chain.

Note 4: Do not run low Voltage (24V or less) wiring in same harness as mains wiring, in control panels.

Note 5: Do not switch 0V side of 24V power supply to the IAC.

Note 6: Maximum Supply Voltage is 24Vac ±10%. Maximum Voltage on terminals 6 and 7 is 10Vdc with respect to 0V. Do not connect 230Vac to any terminal.

Note 7: The 24Vac supply must be fused with a 2A fuse.

IMPORTANT: Low voltage unscreened signal wiring must be run in a separate loom or trunk from any mains wiring and spaced as far as possible away from it (230Vac 45cm min, 415Vac 58cm min, both Voltages are with respect to earth and a maximum current of 15A). For other Voltages/currents refer to the IEE report titled "Electro Magnetic Interference" September 1987 (ISBN85296353X).

CAUTION

- **This is a 24Vac device. Do not exceed rated Voltage. Local wiring regulations and usual safety precautions must be observed.**
- **Ensure good earthing.**
- **The transformer must conform to EN 60742 - DS 25.00/25.001.**
- **Do not switch on power supply until commissioning procedures have been carried out - see page 2.**
- **Observe wiring precautions on page 22.**
- Do not exceed maximum ambient temperature.
- Interference with parts under sealed covers invalidates guarantee.
- Design and performance of Satchwell equipment are subject to continual improvement and therefore liable to alteration without notice.
- Information is given for guidance only and Satchwell do not accept responsibility for the selection or installation of its products unless information has been given by the Company in writing relating to a specific application.
- A periodic system and tuning check of the control system is recommended. Please contact your local Satchwell Service Office for details.

Satchwell

Satchwell Control Systems Limited
Farnham Road, Slough, Berkshire,
United Kingdom SL1 4UH

Tel: +44 (0)1753 550550
Fax: +44 (0)1753 824078

A Siebe Group Company

Printed in England - (04/98)